Description

The AR0501P1 is an uni-directional TVS diode, utilizing leading monolithic silicon technology to provide fast response time and low ESD clamping voltage, making this device an ideal solution for protecting voltage sensitive high-speed data lines. The AR0501P1 has an ultra-low capacitance with a typical value at 0.6pF, and complies with the IEC 61000-4-2 (ESD) with ±25kV air and ±20kV contact discharge. It is assembled into an ultra-small 1.0x0.6x0.5mm lead-free DFN package. The small size, ultra-low capacitance and high ESD surge protection make AR0501P1 an ideal choice to protect cell phone, digital visual interfaces, HDMI, DVI, USB2.0, USB3.0, and other high speed ports.

Features

- Ultra small package: 1.0x0.6x0.5mm
- Ultra low capacitance: 0.6pF typical
- Ultra low leakage: nA level
- Operating voltage: 5V
- Low clamping voltage
- 2-Pin leadless package
- Complies with following standards:
  - IEC 61000-4-2 (ESD) immunity test
    - Air discharge: ±25kV
    - Contact discharge: ±20kV
  - IEC61000-4-5 (Lightning) 5A (8/20μs)
- RoHS Compliant

Dimensions and Pin Configuration

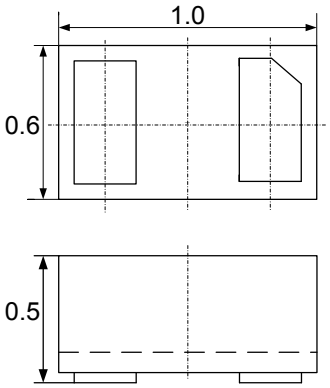

Package Dimensions

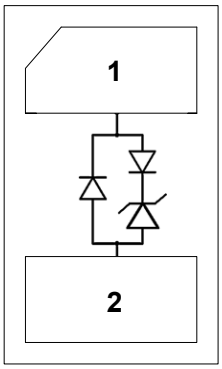

Circuit and Pin Schematic

Mechanical Characteristics

- Package: DFN1006-2 (1.0×0.6×0.5mm)
- Case Material: “Green” Molding Compound.
- Moisture Sensitivity: Level 3 per J-STD-020
- Terminal Connections: See Diagram Below
- Marking Information: See Below

Applications

- Cellular Handsets and Accessories
- Display Ports
- MDDI Ports
- USB Ports
- Digital Visual Interface (DVI)
- PCI Express and Serial SATA Ports

Marking Information

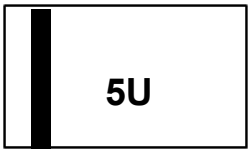

5U = Device Marking Code
Bar denotes cathode

Ordering Information

Part Number	Packaging	Reel Size
AR0501P1	10000/Tape & Reel	7 inch

Absolute Maximum Ratings (T_A=25°C unless otherwise specified)

Parameter	Symbol	Value	Unit
Peak Pulse Power (8/20µs)	Ppk	80	W
Peak Pulse Current (8/20µs)	I_{PP}	5	A
ESD per IEC 61000−4−2 (Air) ESD per IEC 61000−4−2 (Contact)	V_{ESD}	±25 ±20	kV
Operating Temperature Range	T_J	−55 to +125	°C
Storage Temperature Range	Tstg	−55 to +150	°C

Electrical Characteristics (T_A=25°C unless otherwise specified)

Parameter	Symbol	Min	Typ	Max	Unit	Test Condition
Reverse Working Voltage	V_{RWM}			5	V	
Breakdown Voltage	V_{BR}	6			V	I_T = 1mA
Reverse Leakage Current	I_R			0. 5	µA	V_{RWM} = 5V
Clamping Voltage	V_C			10	V	I_{PP} = 1A (8 x 20µs pulse)
Clamping Voltage	V_C			16	V	I_{PP} = 5A (8 x 20µs pulse)
Junction Capacitance	C_J			0.8	pF	VR = 0V, f = 1MHz

Typical Performance Characteristics (TA=25°C unless otherwise Specified)

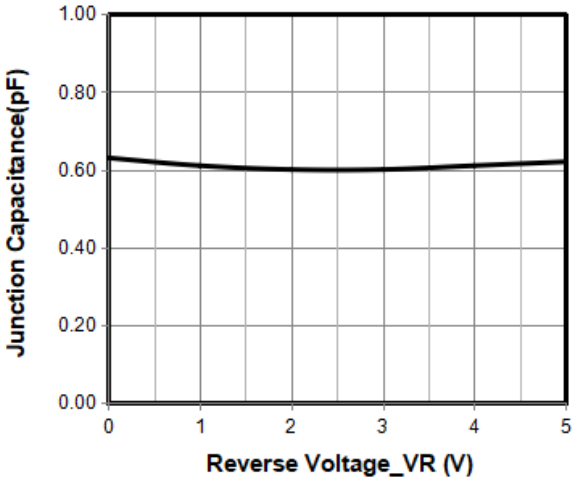

Junction Capacitance vs. Reverse Voltage

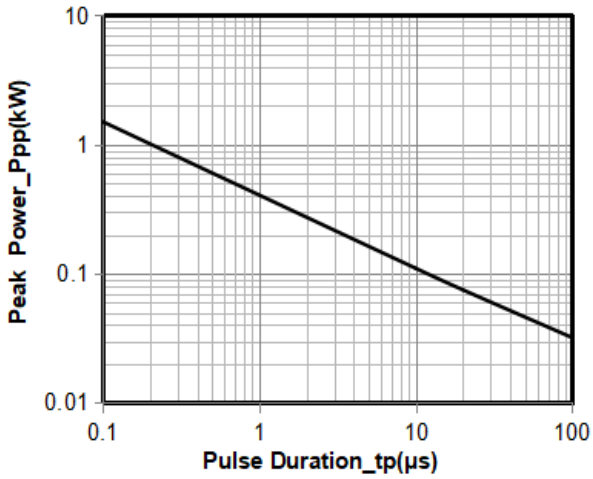

Peak Pulse Power vs. Pulse Time

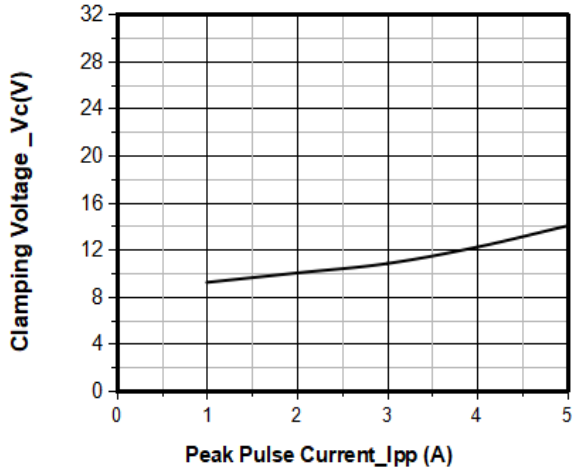

Clamping Voltage vs. Peak Pulse Current

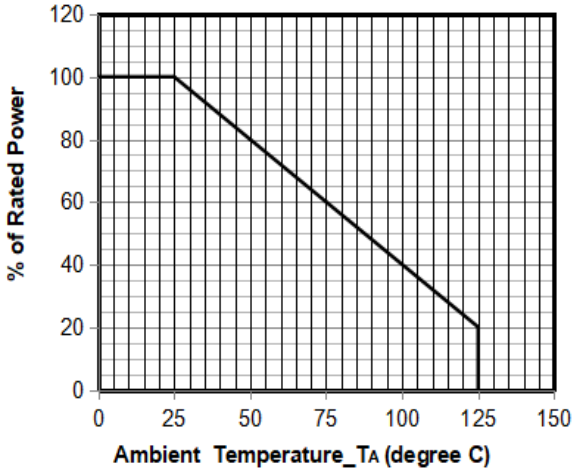

Power Derating Curve

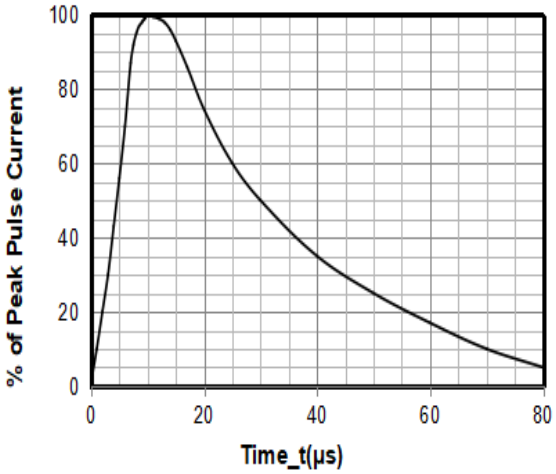

8 X 20μs Pulse Waveform

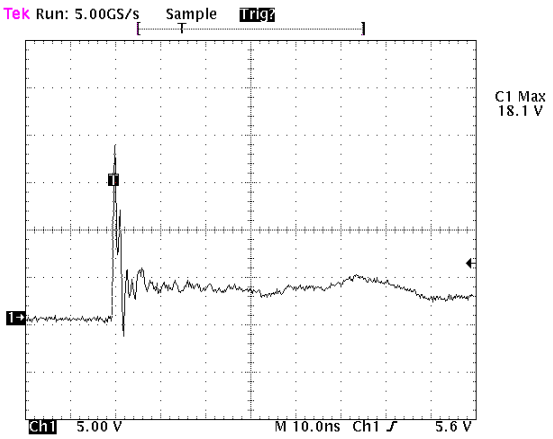

Note：Data is taken with a 10x attenuator

ESD Clamping Voltage

8 kV Contact per IEC61000−4−2

DFN1006-2 Package Outline Drawing

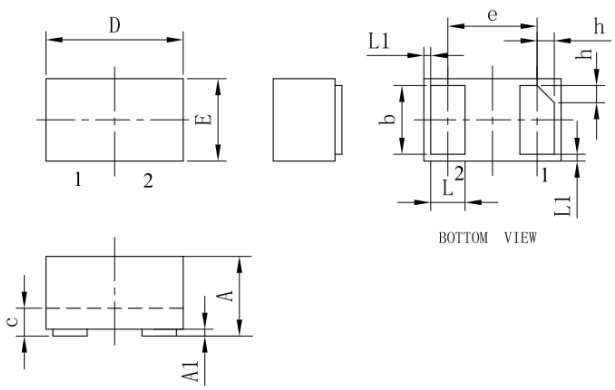

SYM	DIMENSIONS					
	MILLIMETERS			INCHES		
	MIN	NOM	MAX	MIN	NOM	MAX
A	0.45	0.50	0.55	0.018	0.020	0.022
A1	0.00	0.02	0.05	0.000	0.001	0.002
b	0.45	0.50	0.55	0.018	0.020	0.022
c	0.12	0.15	0.18	0.005	0.006	0.007
D	0.95	1.00	1.05	0.037	0.039	0.041
e	0.65 BSC			0.026 BSC		
E	0.55	0.60	0.65	0.022	0.024	0.026
L	0.20	0.25	0.30	0.008	0.010	0.012
L1	0.05REF			0.002REF		
h	0.07	0.12	0.17	0.003	0.005	0.007

Suggested Land Pattern

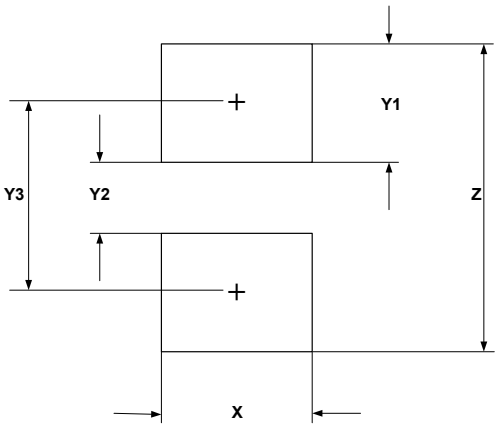

SYM	DIMENSIONS	
	MILLIMETERS	INCHES
X	0.60	0.024
Y1	0.50	0.020
Y2	0.30	0.012
Y3	0.80	0.032
Z	1.30	0.052

Contact Information

Applied Power Microelectronics Co., Ltd.

Website: http://www.appliedpowermicro.com

Email: sales@appliedpowermicro.com

Phone: +86 (0519) 8399 3606

Applied Power Microelectronics Co., Ltd. (APM) reserves the right to make changes to the product specification and data in this document without notice. APM makes no warranty, representation or guarantee regarding the suitability of its products for any particular purpose, nor does APM assume any liability arising from the application or use of any products or circuits, and specifically disclaims any and all liability, including without limitation special, consequential or incidental damages.